Published: 11-May-2011

Manual Transmission / Transaxle External Controls - TDV6 2.7L Diesel -

Lubricant

Item	Specification
* Gearshift linkage grease	Land Rover Part Number UYL 500010 (Kluebersynth LI 44-22)

CAUTION: * Do not use any grease other than that specified

General Specifications

Item	Specification
Gearshift linkage type	Rod shifter enabling selection of six forward gears and one reverse gear with 'knock over' selection of reverse

Torque Specifications

Description	Nm	lb-ft
Gearshift mechanism mounting bracket bolts	25	18

transmissionmanuals.com

Published: 11-May-2011

Manual Transmission / Transaxle External Controls - TDV6 2.7L Diesel - External Controls

Description and Operation

Gear Change Mechanism

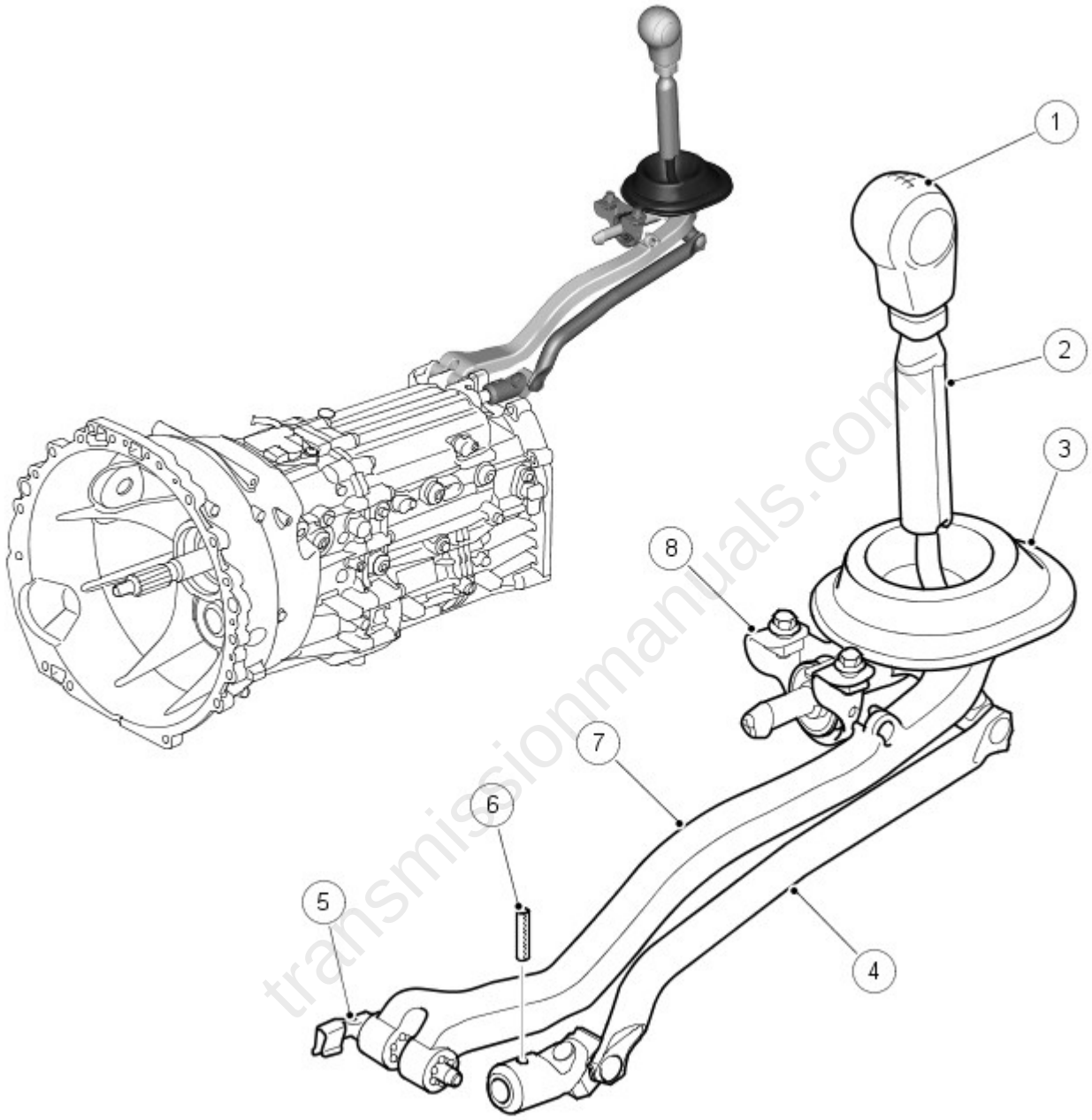

E47713

Item	Part Number	Description
1	-	Gear knob
2	-	Gear lever
3	-	Gaiter
4	-	Shift rod
5	-	Clevis pin
6	-	Roll pin
7	-	Steady rod
8	-	Floater bracket

The gear change assembly is bolted to the transmission tunnel via a floater bracket. A pin and retainer connects the shift rod to the transmissions selector shaft. A steady rod is fitted between the gear change mechanism and the rear of the transmission casing. The rod is held in place by means of a clevis pin for added strength and rigidity.

The gear lever incorporates a vibration attenuator to reduce any Noise Vibration and Harshness (NVH) generated by the powertrain components.

transmissionmanuals.com

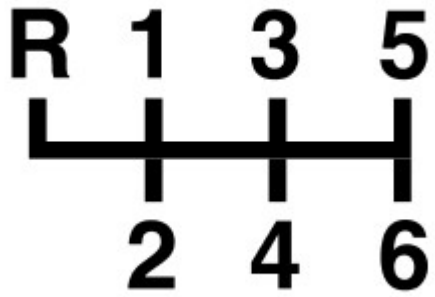

E47714

Bias springs within the transmission provide a positive return of the gear lever to the neutral position with selection of 1st/2nd, 5th/6th and reverse gears being against bias spring pressure. Spring-loaded detents on the selector rod and x-gate butterfly within the transmission, provide positive gear and neutral selection.

transmissionmanuals.com

Published: 11-May-2011

Manual Transmission / Transaxle External Controls - TDV6 2.7L Diesel - Gearshift Lever

Removal and Installation

Removal

1. WARNING: Do not work on or under a vehicle supported only by a jack. Always support the vehicle on safety stands.

Raise and support the vehicle.

2. Remove the floor console upper trim panel.
For additional information, refer to: Floor Console Upper Section (501-12 Instrument Panel and Console, Removal and Installation).

3. Remove the transfer case.
For additional information, refer to: Transfer Case - TDV6 2.7L Diesel (308-07B Transfer Case, Removal).

4. Release the gearshift mounting bracket.

- Remove the acoustic pad.
- Release the gaiter.
- Remove the 2 bolts.

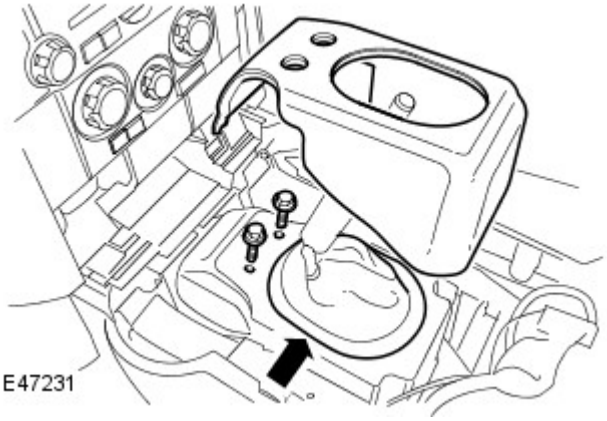

5. Release the gearshift rod.

- Remove the clip.
- Remove and discard the O-ring seals.

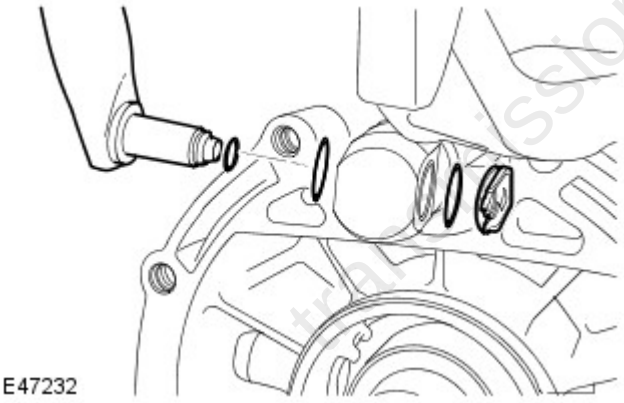

6. Remove the gearshift mechanism.

- Release the clip.
- Remove and discard the pin.

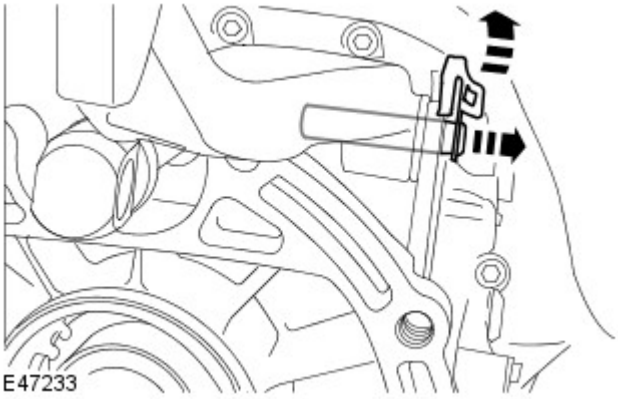

transmissionmanuals.com

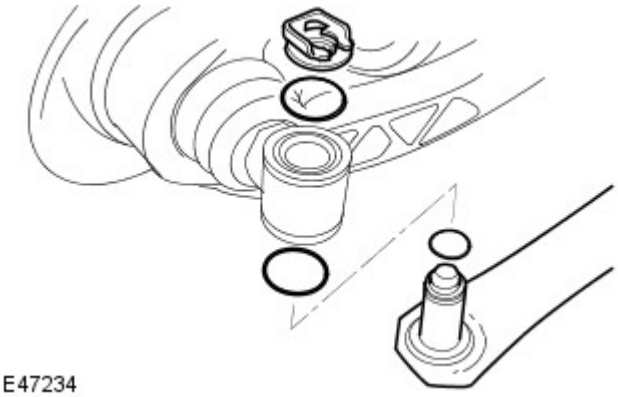
E47234

7. NOTE: Do not disassemble further if the component is removed for access only.

Remove the gearshift rod.

- Remove and discard the clip.
- Remove and discard the O-ring seals.

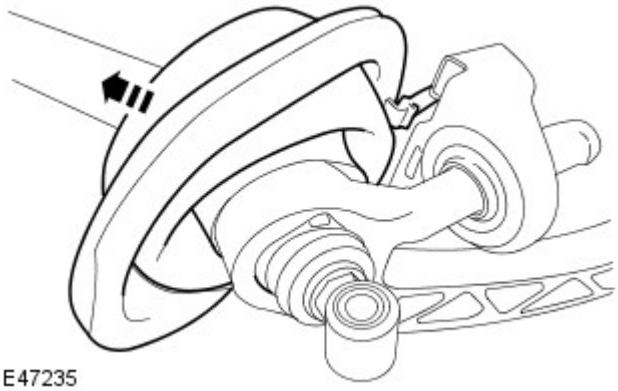
E47235

8. Remove the gaiter.

- Release the gaiter from the gearshift lever ball socket.

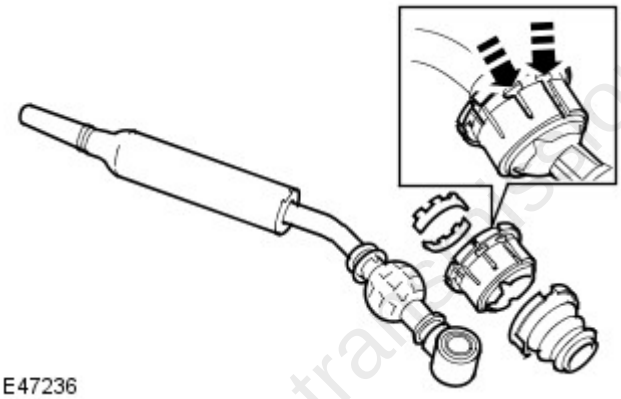
E47236

9. Remove the gearshift lever.

- Release the gearshift lever ball socket from the steady rod.

10. Remove the gearshift lever ball socket.

- Remove the dust seal.
- Remove the 2 clips.

Installation

1. Install the gearshift lever ball socket.

- Clean the components.
- Lubricate the components.
- Install the 2 clips.
- Install the dust seal.

2. Install the gearshift lever.

- Secure the gearshift lever ball socket.

3. Install the gearshift lever gaiter.

transmissionmanuals.com

- Install the gaiter to the gearshift lever and ball socket.

4. Install the gearshift rod to the lever.

- Clean the components.
- Lubricate the components.
- Install new O-ring seals.
- Install the new clip.

5. Install the gearshift mechanism.

- Clean the components.
- Lubricate the components.
- Install the new pin.
- Secure the clip.

6. Install the gearshift rod.

- Clean the components.
- Lubricate the components.
- Install new O-ring seals.
- Install the clip.

7. Install the gearshift mechanism mounting bracket.

- Tighten the bolts to 25 Nm (18 lb.ft).
- Install the gearshift lever gaiter.
- Install the acoustic pad.

8. Install the transfer case.
For additional information, refer to: Transfer Case - TDV6 2.7L Diesel (308-07B Transfer Case, Removal).

9. Install the floor console upper trim panel.
For additional information, refer to: Floor Console Upper Section (501-12 Instrument Panel and Console, Removal and Installation).

transmissionmanuals.com